LEGEND

PRE WORKS BANK SURFACE

POST WORKS BANK SURFACE

D_{50} GRADED ROCK

SITE SPECIFIC DESIGN INPUTS		
PARAMETER	UNIT	VALUE
D_{50} OF ROCK		
LENGTH OF BANK PROTECTED (L)		
HEIGHT OF ROCK BEACHING (H)		
FINISHED ROCK BEACHING SLOPE		

D_{50} GRADED ROCK SPECIFICATION	
EQUIVALENT SIZE	% SMALLER (BY WEIGHT)
2 x D_{50}	100 %
D_{50}	50 %
0.3 x D_{50}	10 %

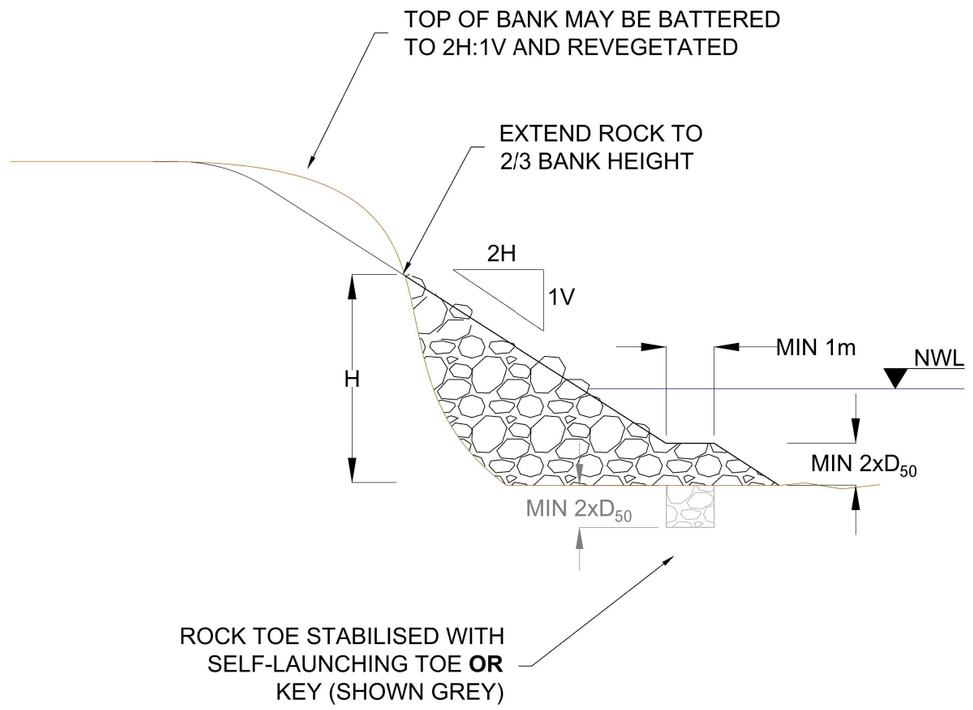

CROSS SECTION 'A' (OPT 2)

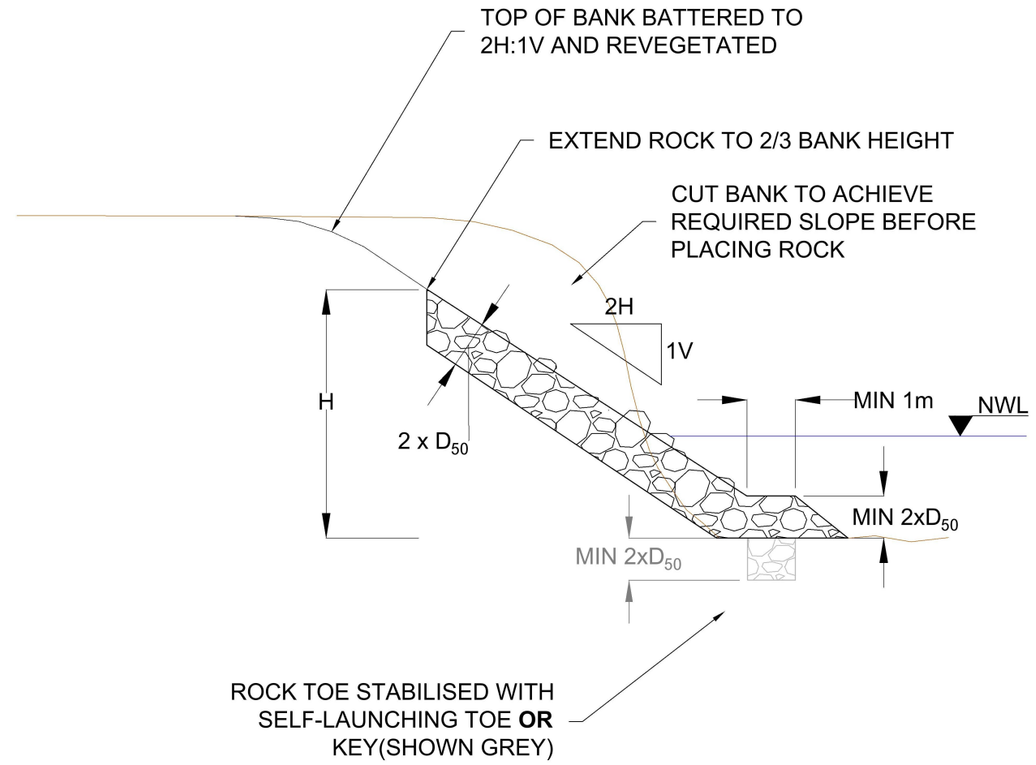

CROSS SECTION 'A' (OPT 1)

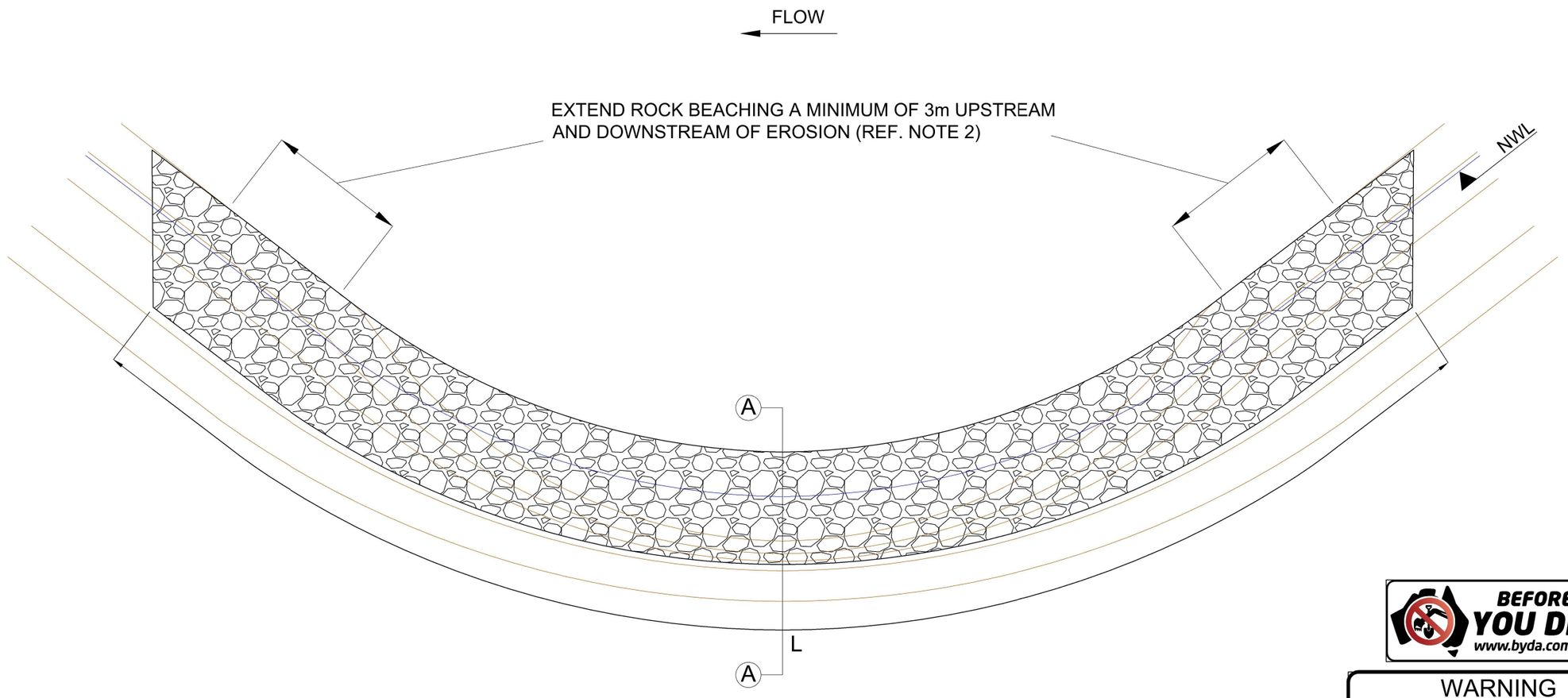

STANDARD PLAN VIEW

NOTES:

1. GRADED ROCK TO BE CLEAN, HARD, ANGULAR ROCK WITH SIZE VARIATION AS PER D_{50} SPECIFICATION TABLE.
2. ALL DIMENSIONS SHOWN ON DRAWING ARE TYPICAL VALUES AND SITE SPECIFIC DESIGN ANALYSIS SHOULD BE CONDUCTED TO DETERMINE DESIGN VALUES. TYPICAL RANGES MAY INCLUDE:
   - MEDIAN ROCK SIZE (D_{50}) OF 300-500mm.
   - FINISHED ROCK BEACHING SLOPE IDEALLY 2H:1V. MAXIMUM STEEPNESS OF 1.5H:1V MAY BE USED IF SITE SPECIFIC DESIGN ANALYSIS INDICATES THIS GRADE WILL BE STABLE.
   - ROCK PLACED TO 2/3 BANK HEIGHT.
   - ROCK EXTENDED PAST EXISTING EROSION A MINIMUM OF 3m, AND POTENTIALLY 1 CHANNEL WIDTH UPSTREAM AND 2 CHANNEL WIDTHS DOWNSTREAM FOR MAJOR MEANDER MIGRATION.
   - MINIMUM BEACHING THICKNESS OF 2 X D_{50}.
3. UPPER BANKS TO BE REVEGETATED WITH NATIVE PLANT MIX.
4. FINISHED ROCK BEACHING NOT TO BE LEFT PROUD OF SURROUNDING BANKS.
5. INSTALLATION GUIDELINE TO BE REFERENCED FOR CONSTRUCTION TECHNIQUES.

BEFORE YOU DIG www.byda.com.au

WARNING
BEWARE OF UNDERGROUND SERVICES. THE LOCATIONS OF UNDERGROUND SERVICES ARE APPROXIMATE ONLY AND THEIR EXACT POSITION SHOULD BE PROVEN ON SITE. NO GUARANTEE IS GIVEN THAT ALL EXISTING SERVICES ARE SHOWN.

FOR INFORMATION
NOT FOR CONSTRUCTION

REV	DESCRIPTION	COMPANY	PROJECT OR WO NUMBER	DRAWN	ENG. CHECK	PR. MAN. APP'D	DATE
B	WATERWAY ROCK INSTALLATION GUIDELINES	WATER TECHNOLOGY		EKB			08/07/26
A	NOTATION AMENDMENTS	MW		MK			17/12/18

REG. ENGINEER
NAME:
DISCIPLINE:
PE REG. NO:
DATE:

COPYRIGHT
Copyright - This document is the property of Melbourne Water. Use or copying of the document in whole or in part without the written permission of Melbourne Water constitutes an infringement of copyright.

Melbourne Water
INSTREAM ROCKWORK INSTALLATION GUIDELINES

DRAFTER | DESIGNER | PROJECT MANAGER APPROVAL | CLIENT REP. APPROVAL
DRAFTING CHECK | ENGINEERING REVIEW

TITLE WATERWAY BANK PROTECTION ROCKWORK STANDARD DRAWING (NOT FOR CONSTRUCTION)
SHEET 1 OF 1

PROJECT DATUM
SCALE NOT TO SCALE
Original Size A1

MELBOURNE WATER CORPORATION
CODE | MWC DRAWING NUMBER | REV
7251/08/101 | B

Last Edited: Elsa.Burnell 08 Jul, 2026 – 9:16am Cad File: U:\2501\25010444_W4G Bank Protection and Grade Control Construction Guideline\Spatial\CAD – design\CAD\MW Title Block\LinksA1_TBK.dwg