BACKFILLING NOTES:

1. BED ZONE - SHALL USE MATERIAL THAT COMPLIES WITH THE FOLLOWING:
   1.1. MELBOURNE WATER 5MM 'A' GRADE CRUSHED ROCK OR 5mm 'A' GRADE CRUSHED SCORIA OR 'A' OR 'B' GRADE SANDS IN ACCORDANCE WITH MELBOURNE WATER SPECIFICATION 21.A.038.
   1.2. VICROADS A1 OR A2 SAND AS DEFINED IN VICROADS STANDARD DOCUMENT 702.
   1.3. MATERIAL OBTAINED FROM EXCAVATION OR OTHERWISE WHICH CONFORMS WITH THE SOIL CLASSES AS DEFINED IN APPENDIX D OF AS 1726 AND THE SELECT FILL GRADING REQUIREMENTS DEFINED IN TABLE 1.

   MATERIAL SHALL EXTEND OVER THE FULL WIDTH OF THE TRENCH AND SHALL BE COMPACTED BY TAMPING, ROLLING AND/OR VIBRATION TO A MINIMUM DENSITY INDEX (DI) OF 50. COMPACTION ACHIEVED SHALL BE MONITORED BY FIELD TESTING IN ACCORDANCE WITH AS 1289.

   THE BED LEVEL SHALL BE GRADED TO PROVIDE FOR A UNIFORM FALL TO THE DISCHARGING END OF THE PIPELINE,WITH LINE AND LEVEL AS SHOWN ON THE DRAWINGS. FOR SOCKETS PROTRUDING BEYOND THE BARREL OUTSIDE SURFACE, CHASES SHALL BE DUG INTO THE BED AND FOUNDATION IF NECESSARY, IN THE APPROPRIATE POSITIONS, SO THAT EACH PIPE IS SUPPORTED ALONG THE FULL LENGTH OF THE BARREL AND THE SOCKET IS NOT SUBJECTED TO POINT LOADING.

2. HAUNCH ZONE - SHALL USE MATERIAL THAT IS CONSISTENT WITH THE REQUIREMENTS OF 1.1 OR 1.2 OR 1.3.

   THE MATERIAL SHALL BE PLACED OVER THE FULL WIDTH OF THE TRENCH IN LAYERS NOT EXCEEDING 150mm COMPACTED THICKNESS AND COMPACTED BY TAMPING, ROLLING OR VIBRATION TO A MINIMUM RELATIVE DENSITY (RD) OF 90% OR A MINIMUM DENSITY INDEX (DI) OF 60. COMPACTION ACHIEVED SHALL BE MONITORED BY FIELD TESTING IN ACCORDANCE WITH AS 1289.

3. SIDE ZONE - SHALL CONSIST OF SELECT FILL MATERIAL THAT COMPLIES WITH THE FOLLOWING:
   3.1. MELBOURNE WATER 20mm 'A' OR 'B' GRADE CRUSHED ROCK OR 20mm 'A' GRADE CRUSHED SCORIA IN ACCORDANCE WITH MELBOURNE WATER SPECIFICATION 21.A.038.
   3.2. VICROADS 20mm CLASS 2 OR CLASS 3 CRUSHED ROCK AS DEFINED IN VICROADS STANDARD DOCUMENT 812 C.
   3.3. MATERIAL THAT COMPLIES WITH THE GRADING DETAILED IN TABLE 2.

   THE MATERIAL SHALL BE PLACED OVER THE FULL WIDTH OF THE TRENCH IN LAYERS NOT EXCEEDING 150mm COMPACTED THICKNESS AND COMPACTED BY TAMPING, ROLLING OR VIBRATION TO A MINIMUM RELATIVE DENSITY (RD) OF 90% OR A MINIMUM DENSITY INDEX (DI) OF 60. COMPACTION ACHIEVED SHALL BE MONITORED BY FIELD TESTING IN ACCORDANCE WITH AS 1289.

4. OVERLAY ZONE - SUBJECT TO THE LOCATIONS AS FOLLOWS:
   4.1. WORKS WITHIN A ROADWAY - OVERLAY ZONE TO CONSIST OF VICROADS 20mm CLASS 2 OR CLASS 3 CRUSHED ROCK AS DEFINED IN VICROADS STANDARD DOCUMENT 812 AND COMPACTED TO 98% SMDD @ OMC.
   4.2. WORKS OUTSIDE OF A ROADWAY -
      4.2.1. FILL CONSISTING OF MATERIAL FROM THE EXCAVATION OR ELSEWHERE AND SHALL NOT CONTAIN ANY STONES LARGER THAN 150mm, NOR MORE THAN 20% WITH A SIZE BETWEEN 75mm AND 150mm. MATERIAL SHOULD BE COMPACTED AS NECESSARY TO PREVENT EXCESSIVE SETTLEMENT.
      4.2.2. SINGLE SIZED OR GAP GRADED AGGREGATE (INCLUDING SCORIA) WHERE THE PIPE TRENCH IS ENCASED WITH SUITABLE GEOFABRIC TO PREVENT THE MIGRATION OF FINES INTO THE EMBEDMENT MATERIAL. COMPACTION AS NECESSARY TO PREVENT EXCESSIVE SETTLEMENT.

   THE FILL IN THE OVERLAY ZONE SHOULD BE PLACED AND COMPACTED IN LAYERS NOT EXCEEDING 200mm.

5. BACKFILL MATERIAL - SUBJECT TO THE LOCATIONS AS FOLLOWS:
   5.1. WORKS WITHIN A ROADWAY - BACKFILL ZONE TO CONSIST OF VICROADS 20mm CLASS 2 OR CLASS 3 CRUSHED ROCK AS DEFINED IN VICROADS STANDARD DOCUMENT 812 AND COMPACTED TO 98% SMDD @ OMC.
   5.2. WORKS OUTSIDE OF A ROADWAY -
      5.2.1. FILL CONSISTING OF MATERIAL FROM THE EXCAVATION OR ELSEWHERE AND SHALL NOT CONTAIN ANY STONES LARGER THAN 150mm, NOR MORE THAN 20% WITH A SIZE BETWEEN 75mmAND 150mm. MATERIAL SHOULD BE COMPACTED AS NECESSARY TO PREVENT EXCESSIVE SETTLEMENT.
      5.2.2. SINGLE SIZED OR GAP GRADED AGGREGATE (INCLUDING SCORIA) WHERE THE PIPE TRENCH IS ENCASED WITH SUITABLE GEOFABRIC TO PREVENT THE MIGRATION OF FINES INTO THE EMBEDMENT MATERIAL. COMPACTION AS NECESSARY TO PREVENT EXCESSIVE SETTLEMENT.

6. SURFACE TREATMENT- SUBJECT TO THE LOCATIONS AS FOLLOWS:
   6.1. WORKS WITHIN A ROADWAY - PAVEMENT SHALL BE AS PER THE LOCAL COUNCIL OR VICROADS STANDARDS.
   6.2. WORKS OUTSIDE OF A ROADWAY - SURFACE SHALL BE OF A STANDARD CONSISTENT WITH THE SURROUNDING AREA AND TO INCLUDE TOP SOILING AND GRASS SEEDING WHERE APPROPRIATE.

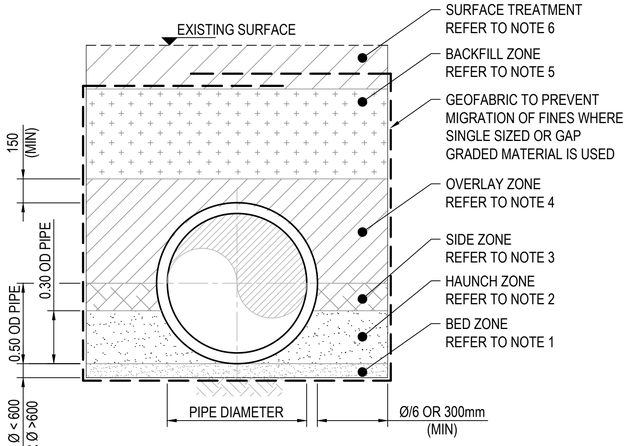

PIPE TRENCH SECTION (REFER NOTE F)
HS2 SUPPORT

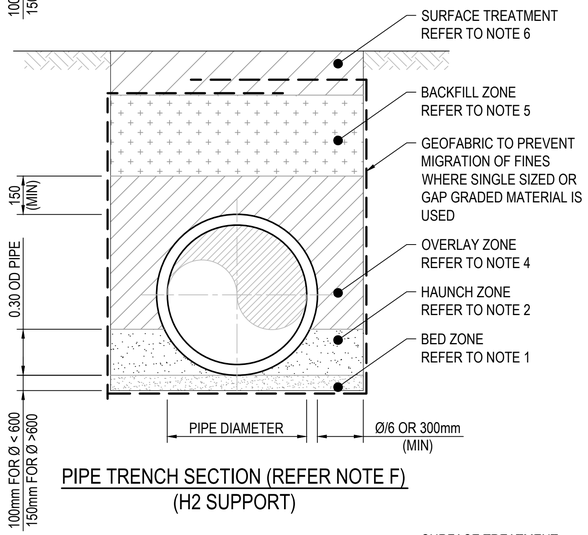

PIPE TRENCH SECTION (REFER NOTE F)
(H2 SUPPORT)

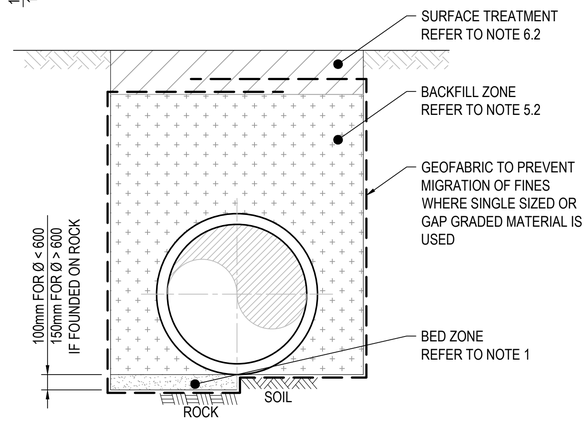

PIPE TRENCH SECTION
U SUPPORT NOT SUITABLE FOR USE IN ROAD RESERVES

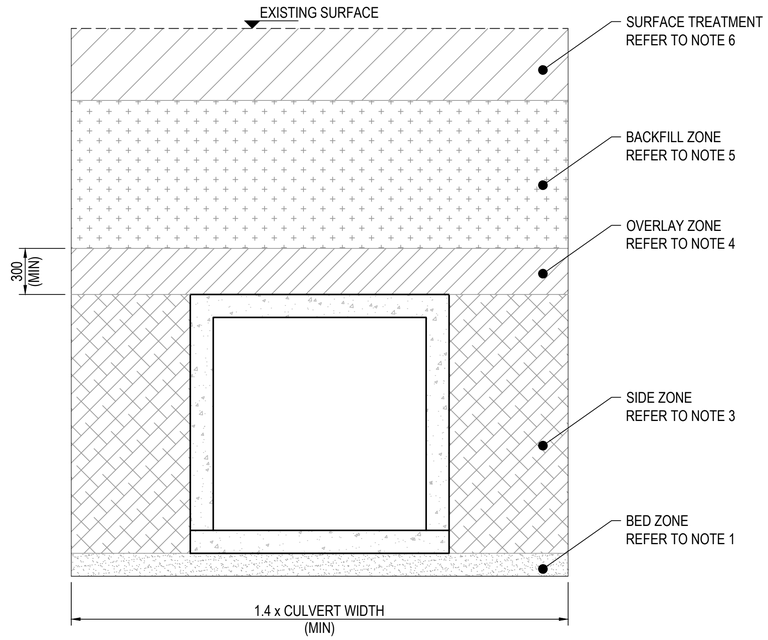

TYPICAL BOX CULVERT TRENCH SECTION UNDER ROADS

DESIGNER NOTES:

A. PIPE DESIGN IS TO BE IN ACCORDANCE WITH AS3725-2007.

B. SMDD @ OMC = STANDARD MAXIMUM DRY DENSITY AT OPTIMUM MOISTURE CONTENT

C. IT IS THE DESIGNER'S RESPONSIBILITY TO ENSURE THAT THE NOMINATED MELBOURNE WATER STANDARD DRAWINGS ARE SUITABLE FOR PROJECT USE. THIS STANDARD DRAWING IS NOT SUITABLE FOR PIPELINES THROUGH RETARDING BASINS, OR LEVEE EMBANKMENTS WHICH WILL REQUIRE SPECIFIC EMBEDMENT DESIGN.

D. REFER DRAWING 7251/08/426 FOR EMBEDMENT DETAILS OF DRAIN CONNECTIONS INTO TRAPEZOIDAL CONCRETE AND BLUESTONE CHANNELS.

E. DESIGN ENGINEER TO CARRY OUT SAFETY IN DESIGN RISK ASSESSMENT FOR ANY DESIGN INCORPORATING MELBOURNE WATER STANDARD DRAWINGS.

F. MINIMUM DISTANCE BETWEEN PIPES AND EDGE OF TRENCH IS TO ALLOW SAFE CLEARANCE FOR TRENCH SUPPORT AND COMPACTION EQUIPMENT. MAXIMUM TRENCH WIDTH TO BE DETERMINED BY DESIGNER BASED ON CLASS OF PIPE.

G. DESIGNER TO DETERMINE THE CLASS OF THE PIPE BASED ON SOIL DESCRIPTION, SUPPORT TYPE, TRENCH WIDTH, PIPE DEPTH AND TRAFFIC LOADING.

TABLE 1 - BEDDING AND HAUNCH ZONE GRADING

SIEVE SIZE (mm)	19.0	2.36	0.60	0.30	0.15	0.075
% MASS PASSING	100	100-50	90-20	60-10	25-0	10-0

TABLE 2 - SIDE ZONE GRADING

SIEVE SIZE (mm)	75	9.5	2.36	0.60	0.075
% MASS PASSING	100	100-50	100-30	50-15	25-0

REV	DESCRIPTION	COMPANY	PROJECT OR WO NUMBER	DRAWN	ENG. CHECK	PR. MAN. APP'D	DATE
A	FIRST REVISION			RD	RM	RM	25.11.15

COPYRIGHT
Copyright - This document is the property of Melbourne Water. Use or copying of the document in whole or in part, for other than Melbourne Water purposes, without the written permission of Melbourne Water constitutes an infringement of copyright.

Melbourne Water
DRAINAGE STANDARD DRAWINGS

DRAFTER	DESIGNER	DESIGN MANAGER APPROVAL	PROJECT MANAGER APPROVAL
RD	JB	RM	VY
DRAFTING CHECK	ENGINEERING REVIEW		
BS	RM		

TITLE **PIPE AND BOX CULVERT BEDDING AND BACKFILL DETAILS**

PROJECT DATUM
SCALE NTS
Original Size **A1**

MELBOURNE WATER CORPORATION
CODE | 7251/08/419 (MWC DRAWING NUMBER) | A (REV)